WASTEWATER ASSET MANAGEMENT PLAN

PREPARED FOR:

VILLAGE OF BLISSFIELD, MICHIGAN

PREPARED BY:

POGGEMEYER DESIGN GROUP, INC.
1168 NORTH MAIN STREET
BOWLING GREEN, OHIO 43402

PDG PROJECT NO. 123700-00015

August 2019

TABLE OF CONTENTS

	On/Following Page
Introduction	3 – 3
Team Members	3 – 3
Mission Statement	3 – 3
Inventory of Assets	4 – 4
Criticality of Assets	4 - 5
Table 1 – Condition Assessment	4 - 4
Table 2- Probability of Failure	4 - 4
Table 3 – Consequence of Failure	5 - 5
Level of Service Goals	5 - 6
Table 4 – Level of Service	5 - 6
Capital Improvement Plan	6 - 6
Funding Structure and Rate Methodology	6 - 7
Conclusion	7 - 7

Appendix A

Asset Inventory

Capital Improvement Plans

Rate Methodology Worksheet

Replacement Expenses

Appendix B

Annual Operating Budget

Appendix C

Sewer Collection Maps

WWTP Drawings

INTRODUCTION

Wastewater systems are made up of assets. The visible assets include pipes, manholes, pump stations, and the treatment facility. Assets lose value over time as the system ages and deteriorates. As the assets deteriorate, the level of service the customers' desire may become compromised and O&M costs may increase.

Asset management is an approach to manage the assets of the system and assist the utility with making decisions on aging assets. The goal is to meet a required level of service in the most cost-effective way through the creation, acquisition, operation, maintenance, rehabilitation and disposal of assets to provide for present and future customers. The intent is to ensure long term sustainability of the sewer utility.

Asset management is a set of procedures to manage assets thru their life cycles. The five core components of an asset management plan are:

1. Asset Inventory
2. Level of Service
3. Critical Assets
4. Revenue Structure
5. Capital Improvement Project Plan

TEAM MEMBERS

Contact Person:	James Wonacott
Title:	Village Administrator
Role:	Overall Management
Email:	administrator@blissfieldmichigan.gov
Team Member:	Brandon Damon
Title:	Wastewater Treatment Supervisor
Role:	Wastewater Treatment Plant Supervisor
Email:	wastewaterplant@bilssfieldmichigan.gov
Team Member:	Randy Retan
Title:	Wastewater Treatment Operator
Role:	Wastewater Treatment Plant Operator
Email:	wastewaterplant@bilssfieldmichigan.gov
Team Member:	Brent Kastel
Title:	Supervisor of Public Works

Role:	WW Collection System Supervisor
Email:	publicworks@blissfieldmichigan.gov

MISSION STATEMENT

To provide safe, effective, and affordable disposal of sanitary waster to the residents and businesses of Blissfield.

INVENTORY OF ASSETS

In 2016 the Village of Blissfield completed a Utility Master Plan that included assessing each component of the wastewater treatment plant and sewer collection system. The sewer collection system looked at each section tributary to its pump station and determined its condition. This master plan was the basis for the inventory of assets.

The Michigan Department of Environment, Great Lakes, and Energy (MEGLE) forms guidance worksheet was used to inventory the assets and consists of a list of assets, their age, condition, useful like and replacement costs.

The village will maintain and update this spreadsheet as items get replaced or need to be moved up on the list.

CRITICALITY OF ASSETS

A criticality factor was assigned to each asset based on its condition, probability of failure and consequence of failure. Not all assets are equally important. The probability of failure and the consequence of the failure determine the criticality. If the product of the probability and consequence of failure is 16 or greater, that asset shall be located on the Capital Improvement Plan (CIP) list.

The tables below illustrate what each rating means.

TABLE 1 - CONDITION ASSESSMENT	
Condition Rating	Description
5	Asset Unserviceable – over 50% of asset requires replacement
4	Significant deterioration- significant renewal/upgrade required (20-40%)
3	Moderate Deterioration- significant maintenance required (10-20%)
2	Minor Deterioration – minor maintenance required (5%)
1	New or Excellent Condition – only normal maintenance required

TABLE 2 - PROBABILITY OF FAILURE

Performance Rating	Description
5	Imminent – Likely to occur in the life of the item
4	Probable – will occur several times in the life of an item
3	Occasional – Likely to occur sometime in the life of an item
2	Remote – Unlikely but possible to occur in the life of an item.
1	Improbable – So unlikely, it can be assumed occurrence may not be experienced

TABLE 3 - CONSEQUENCE OF FAILURE	
Performance Rating	Description
5	Catastrophic Disruption
4	Major Disruption
3	Moderate Disruption
2	Minor Disruption
1	Insignificant Disruption

The ratings were determined based on the assessment that was completed in 2016 and included in the Asset Inventory located in Appendix A.

LEVEL OF SERVICE GOALS

The Level of Service (LOS) defines how Blissfield wants the utility to perform over the long term. The LOS can include technical, managerial, or financial components as long as all regulatory requirements are met. The LOS sets the goals for the utility and allows the operations staff to know what is expected of them and the management staff to understand how to use the staff and other resources efficiently and effectively.

There is a direct link between the LOS provided and the cost to the customer. When a higher LOS is provided, costs to provide that higher level of service will likely increase.

The Table below states Blissfield's LOS goals.

TABLE 4 – LEVEL OF SERVICE				
Sample Areas	Objectives	Level of Service	Is it Measureable	How often Measured
NPDES	All federal and state regulations will be met	Preform all required monitoring	Yes	Monthly reporting
Health, Safety	To provide a safe and injury free work place	No MIOSHA safety violations	Yes	MIOSHA is reviewed every 3-4 yrs; however informal review is done yearly

Operator certification	Must have operator in charge & backup operator on staff	1 certified operator on staff with level C, 1 with Level D	Yes	Yearly
Customer Complaints	To provide excellent customer service	All complaints will be investigated within 2 business days	Yes	Audited Yearly
Response Time	To provide excellent customer service	Customer emergency response time within 2 hours Customers will receive written notice 24 hours in advance of any planned interruption in service.	Yes	Audited Yearly
Operating Reserves	Enough reserves to cover all anticipated major expenses and potential unexpected breakdowns	Follow MEGLE Asset Management Guidelines	Yes	Bi-Annually
Wastewater collection and treatment	Preventative maintenance on all equipment related to the wastewater collection and treatment to prevent unscheduled breakdowns	Document all Maintenance performed	Yes	Audited Yearly

The Asset Management Team developed the LOS based on input from their staff. The LOS may change and adjust over time. This may be required because Blissfield may discover that it is too costly to operate at this LOS or that new rules and regulation require a change in operation.

CAPITAL IMROVEMENT PLAN (CIP)

A 5 year and 20 year Capital Improvement Project Plan (CIP) are located in Appendix A. Projects that are to replace or improve deteriorated assets from the asset inventory worksheet are included. The CIP includes the project's anticipated cost so that funding of the project can be determined.

The reserve required each year according to these projects is then added to the budget.

The CIP is to be re-submitted any time it is updated.

FUNDING STRUCTURE AND RATE METHODOLOGY

The rate methodology is to help determine rates and charges that will provide sufficient revenues

to cover operation, maintenance, replacement, CIP and debt costs. A billable flow will generate revenues thru a rate based on usages. A readiness to serve method will generate revenues thru a fixed unit.

2018 year ending budget were used in the Rate Methodology Worksheet located in Appendix A. Different percentages of variable versus fixed costs can be evaluated. The Village's current charges are $7.46/ 1000 gal with a $48.43 per month fixed charge.

Currently the rates are combined for water and sewer. In FY20 the water and sewer rates will be separated.

The CIP budget numbers are included as well as a replacement budget. The Replacement expenses spreadsheet can be seen in the appendix. These are projects that will be funded out of system revenues.

Rates and charges are developed based upon the billable units the community employs once the total system expense have been identified. Revenues must beat or exceed the expense or the community will be forced to subsidize the water system. Rates and charges should be increased to minimize/eliminate subsidies.

The annual operating budget, current rates, and documentation of legal authority for rate setting are located in Appendix B.

CONCLUSION

Asset management is a process of operating, maintaining and upgrading assets cost-effectively. It is an active, ongoing process that needs to be monitored and updated.

MAPPING

Appendix C has the sewer collection system maps showing the gravity sewers, manholes, sewers and their sizes. There are also maps showing the WWTP layout and the schematic flow diagram for the WWTP.

APPENDIX A

Utility Information

Utility Name:	Village of Blissfield	
Street Address:	415 MacArthur Drive	
City:	Blissfield	
Zip Code:		49228
Phone Number:	517-486-2740	
Email:	wastewaterplant@blissfieldmichigan.gov	

NPDES Number:	MI0021695	
Number of Connections:		1552
Number of Customers:		3340

Personnel

Contact Person:	James Wonacott
Title:	Village Administrator
Role:	Overall Management
Email:	administrator@blissfieldmichigan.gov

Team Member:	Brandon Damon
Title:	Wastewater Treatment Supervisor
Role:	Wastewater Treatment Supervisor
Email:	wastewaterplant@blissfieldmichigan.gov

Team Member:	Randy Retan
Title:	WWTP Operator
Role:	WWTP Operator
Email:	wastewaterplant@blissfieldmichigan.gov

Team Member:	Brent Kastel
Title:	Supervisor of Public Works
Role:	WW Collection System Supervisor
Email:	publicworks@blissfieldmichigan.gov

Team Member:	
Title:	
Role:	
Email:	

Team Member:	
Title:	
Role:	
Email:	

Asset Inventory Table 1

Directions
A. List assets
B. Enter asset information
C. To add more assets use insert function and add rows then copy first asset row to new rows to transfer formulas
D. Enter information in highlighed cells
E. Remaining cells will calculate automatically.

A	B	C	D	E	F	G	H	I	J	K	L	M	N	O	P	Q
Collection Assets	**Capacity**	**Material**	**Location**	**Latitude**	**Longitude**	**Manufacturer**	**Tag Number**	**Original Cost**	**Replacement Cost**	**Depreciation Value**	**Year Installed**	**Remaining Useful Life in Years**	**Condition**	**Probability of Failure**	**Criticality of Asset**	**Business Risk**
Div Public Works Pump Station	400 gpm	Submer	North Lane	41.83393	-83.864595				$ 250,000.00		1980	10	2	3	4	12
Westbrook PS	140 gpm	Submer	West Adrian St	41.83761	-83.884232	Barnes/Mack			$ 188,500.00		1999	15	1	3	2	6
Beagle Road PS	140 gpm	flooded suction	North Quick St	41.8382	-83.87515	Can Tex			$ 188,500.00		1970	2	5	3	3	9
Blissfield Hwy PS	120 gpm	Submer	North Monroe St	41.83421	-83.86517				$ 185,000.00			15	2	3	2	6
Maple Stt. PS	1200 gpm	Submer	North Monroe St	41.83738	-83.867852				$ 400,000.00		2004	20	2	3	4	12
Jipson PS	17 gpm	grinder	South Jipson	41.82321	-83.857807	Barnes			$ 20,000.00		2003	20	1	3	1	3
Gravity Sewers/Force Mains	6-36"	Varies	Various						>$20 M		varies	Varies	3	2	5	10

If Criticality Factor is greater than 16 cell will turn RED
If Criticality Factor is greater than 16 add to CIP table

A	B	C	D	E	F	G	H	I	J	K	L	M	N	O	P	Q
Treatment Assets	**Capacity**	**Material**	**Location**	**Latitude**	**Longitude**	**Manufacturer**	**Tag Number**	**Original Cost**	**Replacement Cost**	**Depreciation Value**	**Year Installed**	**Remaining Useful Life in Years**	**Condition**	**Probability of Failure**	**Criticality of Asset**	**Business Risk**
Comminuter	3 hP		WWTP									0	5	5	2	10
influent pumps (4)	5.35 mgd											3	5	4	5	20
oxidation ditch (2)	222,900 gal/ea					Lakeside					1987	20	2	3	5	15
clarifiers (2)	20,000 gal/ea					Lakeside					1987	20	3	4	4	16
UV disinfection	3.81 MGD										1987	3	4	4	4	16
sludge digestion tank	86,000 gal											40	2	1	2	2
sludge storage tank	347,900 gal											40	2	1	2	2
RAS Pumps (2)	1000 gpm											3	4	4	3	12
chemical treatment	1-12 gph											5	4	3	2	6
Enter asset												0		0	0	0
Enter asset												0				0
Enter asset												0				0
Enter asset												0				0
Enter asset												0				0
Enter asset												0				0
Enter asset												0				0
Enter asset												0				0

If Criticality Factor is greater than 16 cell will turn RED
If Criticality Factor is greater than 16 add to CIP table

Capital Improvement Project Plan

Table 6
5 year CIP

Directions

A. List projects to be completed
B. Determine how long before the project must begin
C. Enter the total projected cost of the project
D. To add more CIP's use insert function and add rows then copy first CIP row to new rows to transfer formulas
E. Enter information in highlighed cells
F. Remaining cells will calculate automatically.

A	B		C	
Projects	**Years Until Project Must Begin**	**Completion Date**	**Cost**	**Reserve Required Each Year**
WWTP Improvements	1	2021	$ 5,523,611	$ 273,000
Beagle Street PS	2	2022	$ 188,500	$ 94,250
Enter project	0		$ -	$ -
Total Capital Improvement reserve required in the current year				$ 367,250
				Click Total to add to Budget

Capital Improvement Project Plan

Table 7
20 year CIP

Directions
A. List projects to be completed
B. Determine how long before the project must begin
C. Enter the total projected cost of the project
D. To add more CIP's use insert function and add rows then copy first CIP row to new rows to transfer formulas
E. Enter information in highlighed cells
F. Remaining cells will calculate automatically.

A	B		C	
Projects	**Years Until Project Must Begin**	**Completion Date**	**Cost**	**Reserve Required Each Year**
DPW FM	10	2030	$ 46,125	$ 4,613
Walnut Street Sewer	10	2030	$ 338,400	$ 33,840
Parkwood Street sewer	10	2030	$ 84,315	$ 8,432
Adrian Street sewer	10	2030	$ 775,100	$ 77,510
				$ -
Worth,Quick, Main St SS	10	2030	$ 216,000	$ 21,600
Maple Street PS Sewer	20	2040	$ 559,400	$ 27,970
North Lane Street Sewer	10	2030	$ 628,280	$ 62,828
Macarthur Street Sewer	10	2030	$ 249,250	$ 24,925
Adrian Street Sewer Replacement	15	2035	$ 1,334,500	$ 88,967
Enter project	0		$ -	$ -
Total Capital Improvement reserve required in the current year				$ 350,684
				Click Total to add to Budget

Rate Methodology Table 4

Directions

A. To add more line item expenses use insert function and add rows then copy first line item row to new rows to transfer formulas

B. Enter information in highlighed cells

C. Remaining cells will calculate automatically.

Gallons (mil)	<<< Click at left and select flow units (million cubic feet or millions of gallons)
333.00	<<< Enter annual billable flow in units selected above
0.011	<<< Enter typical quarterly flow of single-family home in units selected above
Hookups	<<< Click at left and select the type of fixed units
1,552	<<< Enter number of fixed units

Calculate Operating Reserve (optional if creating budget for only OM&R)	
$ 1,191,254	Total OM&R from Expenditures in table below
$ 595,627	Targeted Operating Reserve Amount (this is 50% of OM&R)
$ 2,887,580	<<< Enter amount of cash or equivalents
$ (2,291,953)	Additional Operating Reserves Needed (If negative number, stop here)
5	<<< Enter # of years to accumulate reserves (rule of thumb is 5 years)
$ -	Annual Contribution To Achieve Targeted Operating Reserve Amount

1. Edit budget items below, if needed
2. Enter budget amount for each item in highlighted cells
3. Under Options 3 and 4, enter percent of entire budget allocated to billable flow (Variable). The remainder is allocated to Fixed.
4. Under Option 5, enter percent of each budget item allocated to billable flow. The remainder is allocated to Fixed.
5. Click on Capital Improvements tab and Replacement tab to complete those worksheets

Expenditures	**Budget**	**Option 1**	**Option 2**	**Option 3**		**Option 4**		**Option 5**		
		Variable	Fixed	Variable	Fixed	Variable	Fixed		Variable	Fixed
		100%	100%	80%	20%	20%	80%	%	50%	50%
Operation, Maintenance and Repair (OM&R)										
Salaries	138380	$ 138,380	$ 138,380	$ 110,704	$ 27,676	$ 27,676	$ 110,704	0%	$ 55,352	$ 55,352
* Insurance	$ 60,440	$ 60,440	$ 60,440	$ 48,352	$ 12,088	$ 12,088	$ 48,352	0%	$ 24,176	$ 24,176
* Dental	$ -	$ -	$ -	$ -	$ -	$ -	$ -	0%	$ -	$ -
* MERS	$ -	$ -	$ -	$ -	$ -	$ -	$ -	0%	$ -	$ -
* Medicare	$ -	$ -	$ -	$ -	$ -	$ -	$ -	0%	$ -	$ -
* FICA	$ -	$ -	$ -	$ -	$ -	$ -	$ -	0%	$ -	$ -
* Disability	$ -	$ -	$ -	$ -	$ -	$ -	$ -	0%	$ -	$ -
Unemployment Insurance	$ -	$ -	$ -	$ -	$ -	$ -	$ -	0%	$ -	$ -
Postage	$ -	$ -	$ -	$ -	$ -	$ -	$ -	0%	$ -	$ -
Bank Charges	$ -	$ -	$ -	$ -	$ -	$ -	$ -	0%	$ -	$ -
Operating Supplies	$ 15,450	$ 15,450	$ 15,450	$ 12,360	$ 3,090	$ 3,090	$ 12,360	0%	$ 6,180	$ 6,180
Contract Services	$ 135,000	$ 135,000	$ 135,000	$ 108,000	$ 27,000	$ 27,000	$ 108,000	0%	$ 54,000	$ 54,000
Telephone	$ 1,000	$ 1,000	$ -	$ 800	$ 200	$ 200	$ 800	0%	$ 400	$ 400
Dues	$ 1,250	$ 1,250	$ 1,250	$ 1,000	$ 250	$ 250	$ 1,000	0%	$ 500	$ 500
Printing	$ -	$ -	$ -	$ -	$ -	$ -	$ -	0%	$ -	$ -
Insurance & Bonds	$ 7,800	$ 7,800	$ 7,800	$ 6,240	$ 1,560	$ 1,560	$ 6,240	0%	$ 3,120	$ 3,120
Utilities	$ 60,500	$ 60,500	$ 60,500	$ 48,400	$ 12,100	$ 12,100	$ 48,400	0%	$ 24,200	$ 24,200
Repairs	$ 21,000	$ 21,000	$ 21,000	$ 16,800	$ 4,200	$ 4,200	$ 16,800	0%	$ 8,400	$ 8,400
Maintenance	$ 27,000	$ 27,000	$ 27,000	$ 21,600	$ 5,400	$ 5,400	$ 21,600	0%	$ 10,800	$ 10,800
Rentals	$ 5,500	$ 5,500	$ 5,500	$ 4,400	$ 1,100	$ 1,100	$ 4,400	0%	$ 2,200	$ 2,200
GIS software	$ -	$ -	$ -	$ -	$ -	$ -	$ -	0%	$ -	$ -
Replacement (See Table 4)	$ 717,934	$ 717,934	$ 717,934	$ 574,347	$ 143,587	$ 143,587	$ 574,347	0%	$ 287,173	$ 287,173
Total OM&R	**$ 1,191,254**	**$ 1,191,254**	**$ 1,190,254**	**$ 953,003**	**$ 238,251**	**$ 238,251**	**$ 953,003**		$ 476,501	$ 476,501
Capital Improvement (See Table 6)	$ 367,250	$ 367,250	$ 367,250	$ 293,800	$ 73,450	$ 73,450	$ 293,800	0%	$ -	$ 367,250
Operating Reserves	$ 27,300	$ 27,300	$ 27,300	$ 21,840	$ 5,460	$ 5,460	$ 21,840	0%	$ -	$ 27,300
Debt Expenses	$ 66,220	$ 66,220	$ 66,220	$ 52,976	$ 13,244	$ 13,244	$ 52,976	0%	$ -	$ 66,220
Miscellaneous	$ -	$ -	$ -	$ -	$ -	$ -	$ -	0%	$ -	$ -
Total Sewer System Expenses	**$ 1,652,024**	**$ 1,652,024**	**$ 1,651,024**	**$ 1,321,619**	**$ 330,405**	**$ 330,405**	**$ 1,321,619**		**$ 476,501**	**$ 937,271**

Calculate Rate	**Option 1**	**Option 2**	**Option 3**	**Option 4**	**Option 5**
Rate per 1000 Gallons	$ 4.96	$ -	$ 3.97	$ 0.99	$ 1.43
Readiness to serve charge/Hookup	$ -	$ 1,063.80	$ 212.89	$ 851.56	$ 603.91
Quarterly Bill for single-family home	**$ 0.05**	**$ 265.95**	**$ 53.27**	**$ 212.90**	**$ 150.99**

Replacement Expenses Table 5

Directions

A. List assets to be replaced or rehabilitated
B. Determine how long before action must take place
C. Enter cost to replace or rehabilitate
D. To add more replacement items use insert function and add rows then copy first line item row to new rows to transfer formulas
E. Enter information in highlighed cells
F. Remaining cells will calculate automatically.

A	B	C	
Projects	**Remaining Useful Life in Years**	**Replacement Cost**	**Reserve Required Each Year**
WWTP Improvements	3	$ 5,523,611	$ 273,000
DPW FM	10	$ 46,125	$ 4,613
Walnut Street Sewer	10	$ 338,400	$ 33,840
Parkwood Street sewer	10	$ 84,315	$ 8,432
Adrian Street sewer	10	$ 775,100	$ 77,510
Beagle Street PS	2	$ 188,500	$ 94,250
Worth,Quick, Main St SS	10	$ 216,000	$ 21,600
Maple Street PS Sewer	20	$ 559,400	$ 27,970
North Lane Street Sewer	10	$ 628,280	$ 62,828
Macarthur Street Sewer	10	$ 249,250	$ 24,925
Adrian Street Sewer Replacement	15	$ 1,334,500	$ 88,967
Enter asset to be replaced	0	$ -	$ -
Total Replacement reserves required in the current year			$ 717,934
			Click Total to add to Budget

* USDA annual debt retirement payment

APPENDIX B

VILLAGE OF BLISSFIELD, MICHIGAN

Statement of Revenues, Expenses and Changes in Fund Net Position

Proprietary Funds
For the Year Ended September 30, 2018

	Business-type Activities	Governmental Activities
	Water and Sewer Enterprise Fund	Motor Vehicle Internal Service Fund
Operating revenues		
Charges for services	$ 2,504,230	$ 103,576
Other	53,810	-
Total operating revenues	2,558,040	103,576
Operating expenses		
Administrative:		
Wages and benefits	175,130	-
Supplies	8,900	-
Other operating costs	70,317	-
Sewer department:		
Wages and benefits	182,102	-
Supplies	24,664	-
Contractual services	66,504	-
Other operating costs	201,693	-
Water department:		
Wages and benefits	460,282	-
Supplies	465,807	-
Contractual services	65,111	-
Other operating costs	167,008	-
Wages	-	43,617
Insurance	-	8,664
Maintenance	-	19,319
Supplies	-	40,711
Other	-	21
Depreciation	317,957	48,873
Total operating expenses	2,205,475	161,205
Operating income (loss)	352,565	(57,629)
Nonoperating revenues (expenses)		
Interest revenue	5	-
Interest expense	(112,534)	-
Total nonoperating expenses	(112,529)	-
Income (loss) before transfers	240,036	(57,629)
Transfers in	210,000	-
Transfers out	(33,870)	(2,560)
Change in net position	416,166	(60,189)
Net position, beginning of year	7,263,318	250,592
Net position, end of year	$ 7,679,484	$ 190,403

The accompanying notes are an integral part of these financial statements.

VILLAGE OF BLISSFIELD, MICHIGAN

Statement of Cash Flows

Proprietary Funds
For the Year Ended September 30, 2018

	Business-type Activities	Governmental Activities
	Water and Sewer Enterprise Fund	Motor Vehicle Internal Service Fund
Cash flows from operating activities		
Receipts from customers and users	$ 2,553,028	$ -
Receipts for interfund services	-	103,576
Payments to suppliers and contractors	(1,144,122)	(72,750)
Payments to employees for services	(773,486)	(44,089)
Net cash provided by (used in) operating activities	635,420	(13,263)
Cash flows from noncapital financing activities		
Transfers in	210,000	-
Transfers out	(33,870)	(2,560)
Net cash provided by (used in) noncapital financing activities	176,130	(2,560)
Cash flows from capital and related financing activities		
Principal paid on debt	(520,000)	-
Interest paid on debt	(112,534)	-
Purchase of capital assets	(184,043)	(8,799)
Net cash used in capital and related financing activities	(816,577)	(8,799)
Cash flows from investing activities		
Interest income received	5	-
Net change in cash and cash equivalents	(5,022)	(24,622)
Cash and cash equivalents, beginning of year	(57,402)	42,174
Cash and cash equivalents, end of year	$ (62,424)	$ 17,552
Reconciliation to the Statement of Net Position		
Cash and cash equivalents	$ -	$ 17,552
Negative equity in cash and cash equivalents	(62,424)	-
	$ (62,424)	$ 17,552

continued...

VILLAGE OF BLISSFIELD, MICHIGAN

Statement of Cash Flows

Proprietary Funds
For the Year Ended September 30, 2018

	Business-type Activities	Governmental Activities
	Water and Sewer Enterprise Fund	Motor Vehicle Internal Service Fund
Reconciliation of operating income (loss) to net cash provided by (used in) operating activities		
Operating income (loss)	$ 352,565	$ (57,629)
Adjustments to reconcile operating income (loss) to net cash provided by (used in) operating activities:		
Depreciation	317,957	48,873
Changes in assets and liabilities:		
Accounts receivable	(5,012)	-
Inventories	(378)	-
Prepaid items	800	(2,336)
Interfund payable	4,687	(1,509)
Accounts payable	(28,317)	(190)
Accrued payroll	4,962	(472)
Accrued liabilities	(50,910)	-
Compensated absences	373	-
Net pension liability	(22,192)	-
Deferred outflows related to the net pension liability	(13,818)	-
Deferred inflows related to the net pension liability	74,703	-
Net cash provided by (used in) operating activities	$ 635,420	$ (13,263)

concluded.

The accompanying notes are an integral part of these financial statements.

APPENDIX C

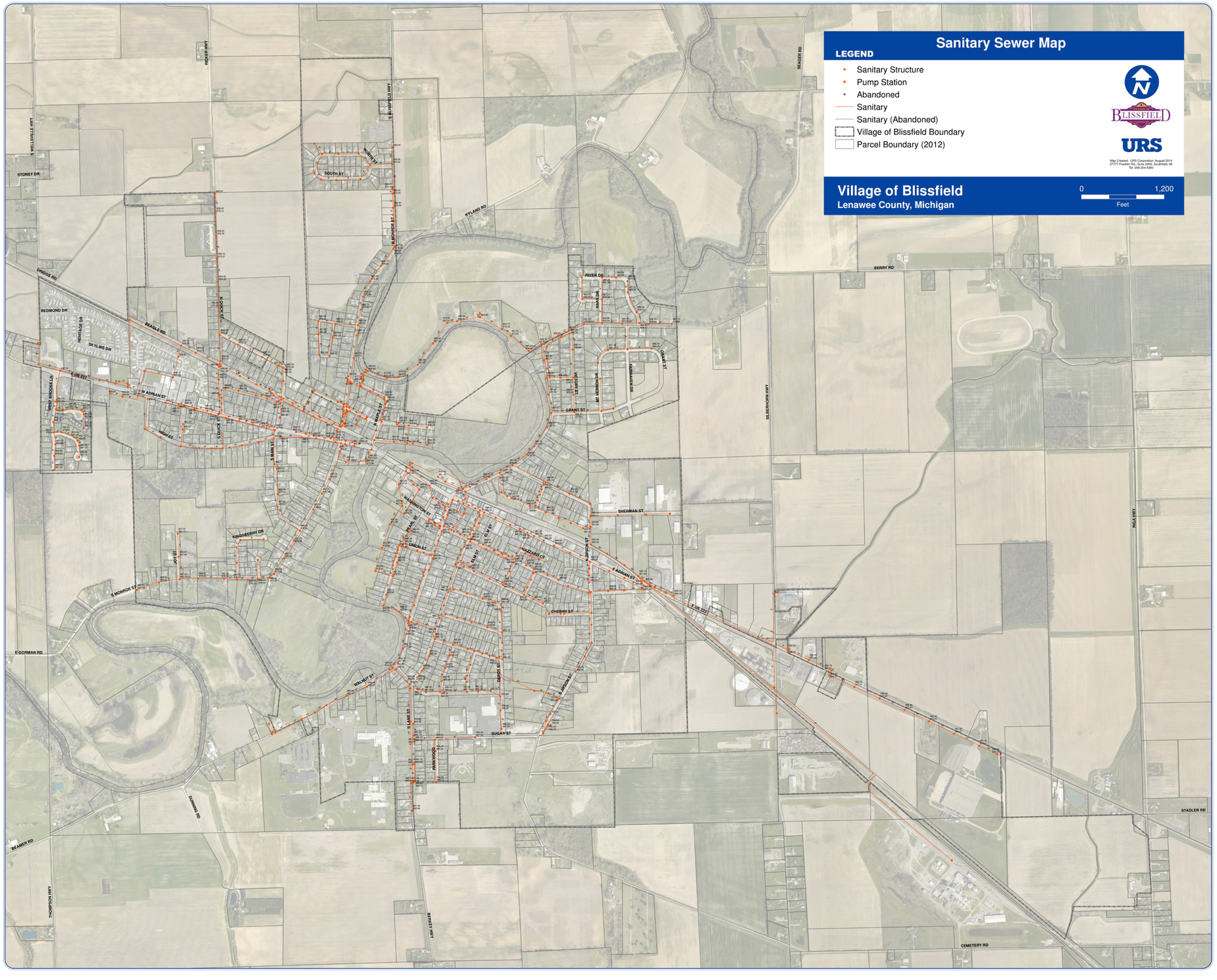

N

BLISSFIELD GRAVITY SEWER SYSTEM
PLATE 1

BLISSFIELD WWTP ASSET MANAGEMENT PLAN

POGGEMEYER DESIGN GROUP

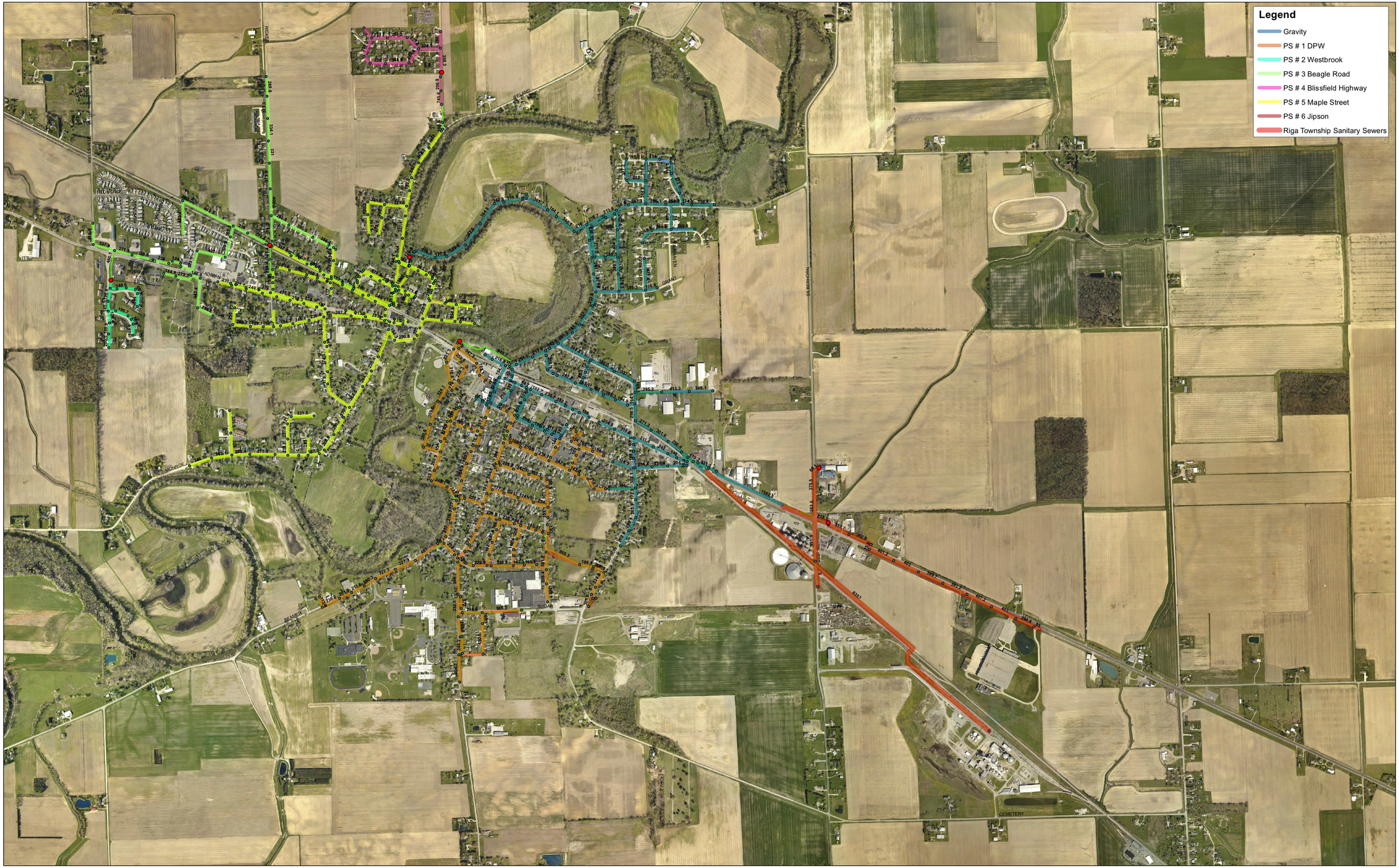

0 600 1,200 2,400 Feet

N

SANITARY PUMP STATION
AND GRAVITY SEWER ZONES
PLATE 2

BLISSFIELD WWTP ASSET MANAGEMENT PLAN

POGGEMEYER DESIGN GROUP

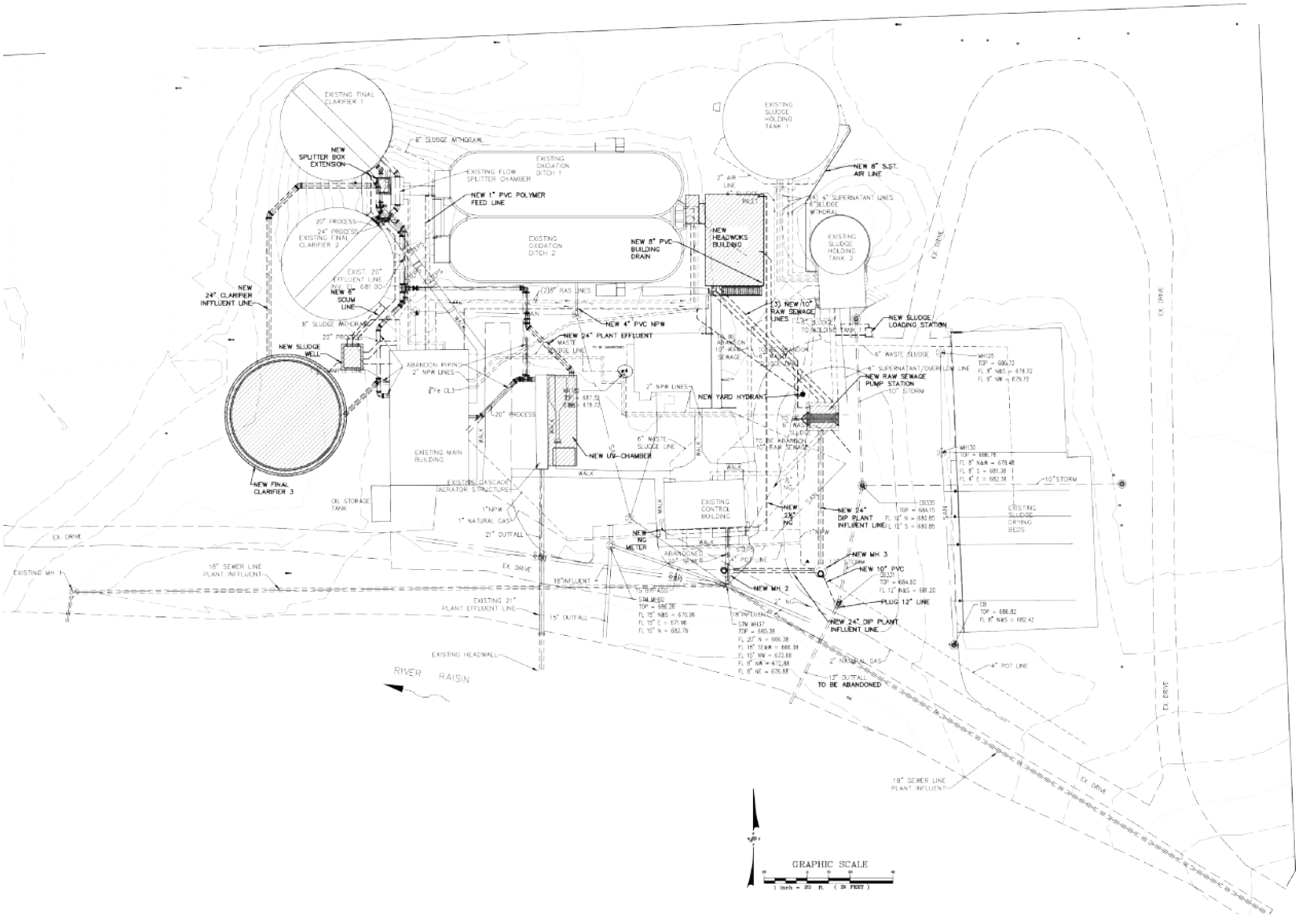

POGGEMEYER DESIGN GROUP, INC.
PLANNERS • ENGINEERS • ARCHITECTS
(1188 NORTH MAIN STREET (419) 352-7537 BOWLING GREEN, OHIO 43402

WASTEWATER TREATMENT PLANT IMPROVEMENTS
VILLAGE OF BLISSFIELD, MICHIGAN

EXISTING SITE YARD PIPING RENOVATION-PLAN

W.M.V. D.M.P.
MDEQ 5/29/18

C-102
OF
JOB NUMBER
12.17000000011

PROPOSED WWTP
VILLAGE OF BLISSFIELD

PLATE 3

BLISSFIELD WWTP
ASSET MANAGEMENT PLAN

POGGEMEYER
DESIGN GROUP

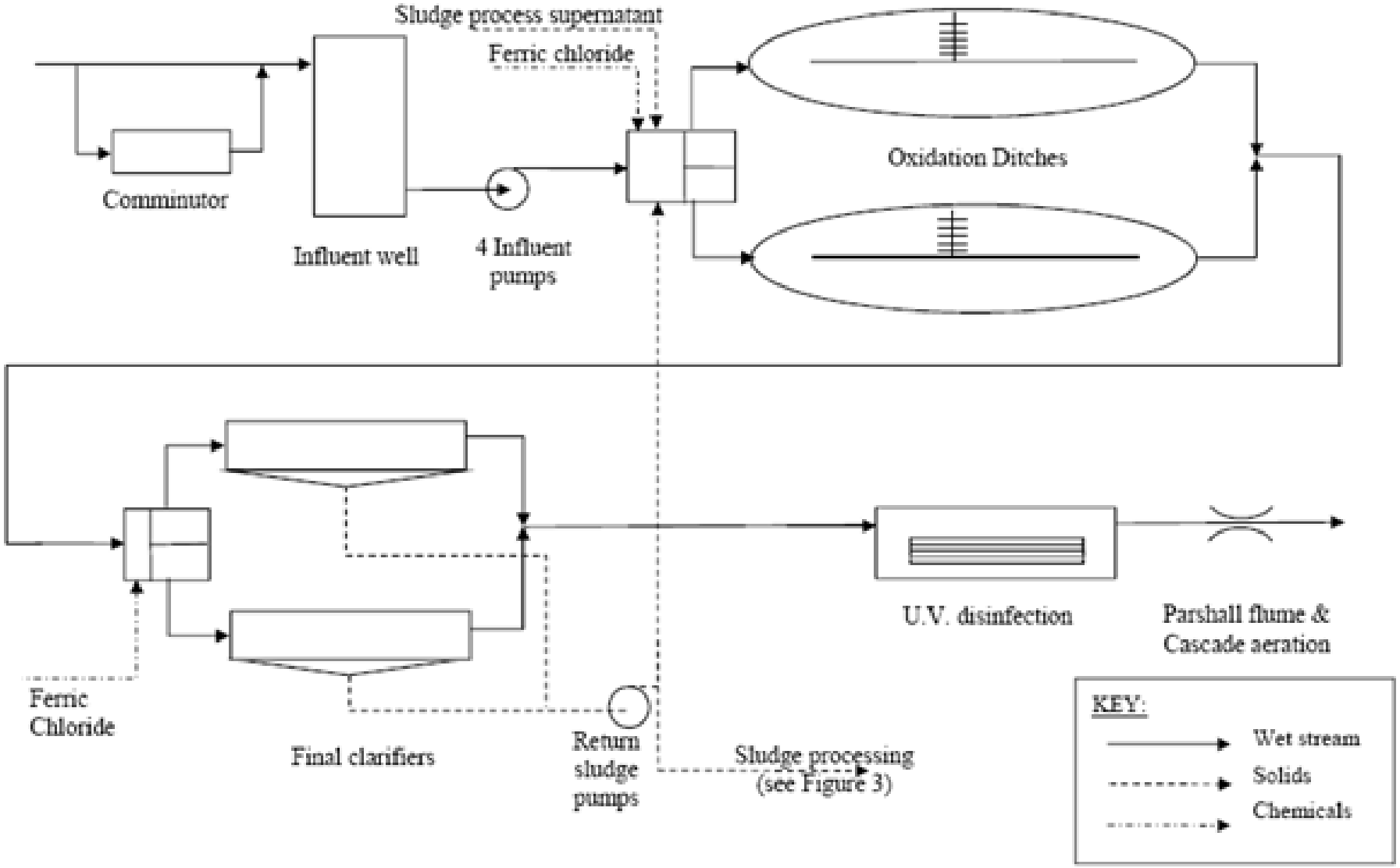

Figure 2 – Flow Schematic of Wet Stream at Blissfield WWTP

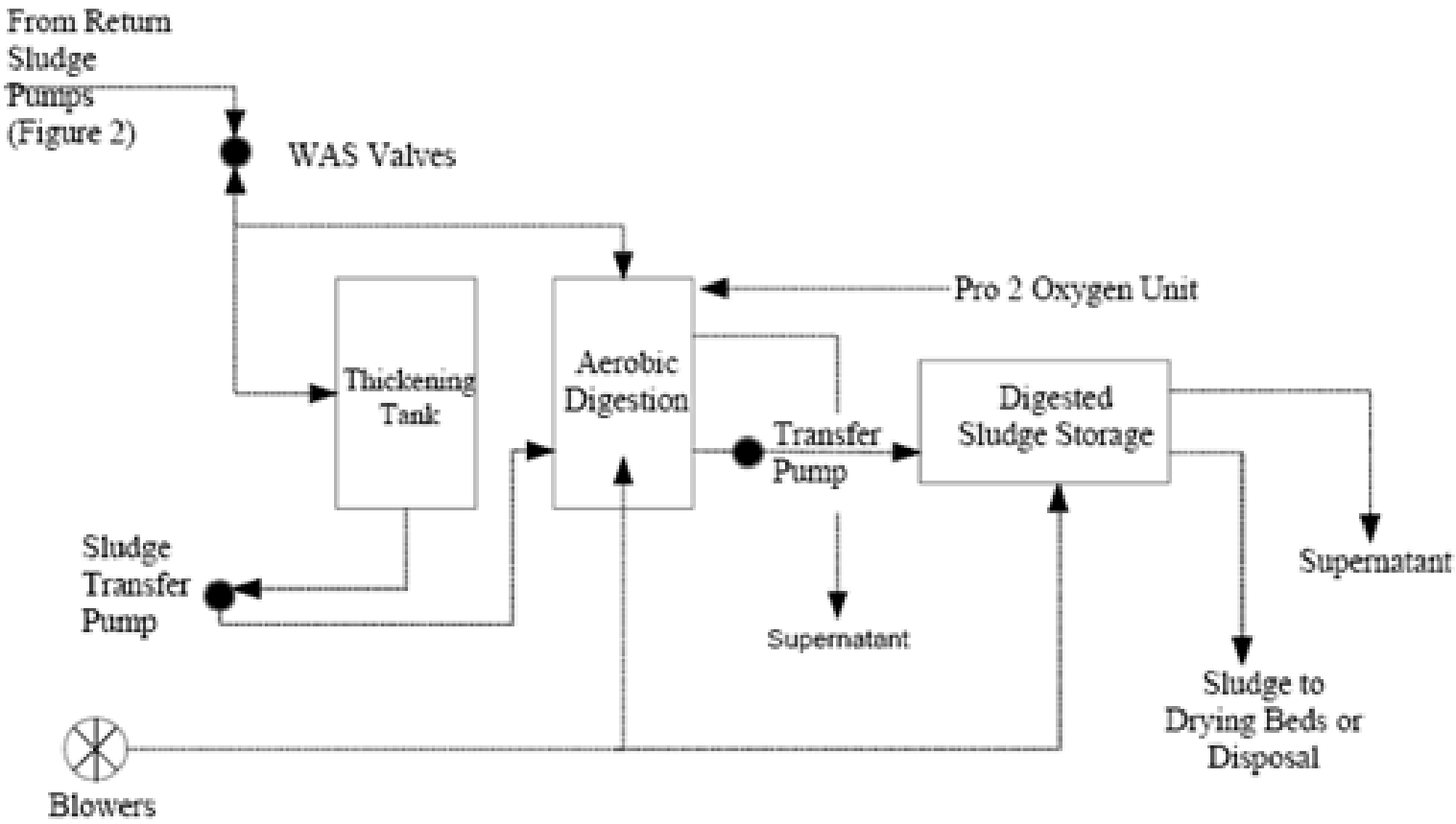

Figure 3 – Flow Schematic of Solids Stream at Blissfield WWTP